PRO

9905

Operation instructions
Gebrauchsanweisung
Gebruiksaanwijzing
Manuel d'utilisation

1913170E

PRO 3000
PRO 4000
PRO 5000

English Deutsch Nederlands Français

Read carefully these instructions before you use the welding machine !

Bitte, lesen Sie diese Gebrauchsanweisungen vor Gebrauch der Schweißmaschine !

Lees deze gebruiksaanwijzing aandachtig door voor u de lasmachine in gebruik neemt !

Veuillez lire et appliquer ces instructions avant utilisation de la machine !

KEMPPI

ENGLISH

OPERATION CONTROL AND CONNECTORS 4
ACCESSORIES
- Remote control devices 5
- Control panels 6
- Cables 8

TECHNICAL DATA 10
INSTALLATION
- Siting the machine 11
- Mounting the control panels PL and PX 11
- Connection to the mains supply 11
- Welding and ground cables 11

OPERATION CONTROL SWITCHES AND POTENTIOMETERS AND THEIR USE
- Main switch I/O 12
- Pilot lamps 12
- Local or remote control of welding current 12
- Operation of cooling fan 12

ACCESSORIES
- PL AND PX CONTROL PANELS' OPERATION IN MMA WELDING
- Control for MMA welding dynamics (PL, PX) 12
- Control of ignition pulse current (PX) 12
- Meter display (PL, PX) 12
- Operation mode selection (PX)
  - Normal MMA welding 13
  - Point to point welding 13
  - Carbon arc gouging 13

COOLING UNIT SUPPLY 13
OPERATION SAFETY 13
MAINTENANCE
- Cables 14
- Power source 14
- Regular maintenance 14

OPERATION DISTURBANCES
- Operation of the overload protection 14
- Control fuses 14
- Under- and overvoltages in the mains supply 14
- Loss of a phase in the mains supply 14

TERMS OF GUARANTEE 14

DEUTSCH

BEDIENUNGSELEMENTE UND ANSCHLÜSSE 4
ZUSATZGERÄTE
- Fernregler 5
- Steuerpanel 6
- Kabel 8

TECHNISCHE DATEN 16
INBETRIEBNAHME
- Aufstellen 17
- Montage der PL- und PX-Steuerpanel 17
- Netzanschluß 17
- Schweiß- und Stromrückleitungskabel 17

BEDIENUNGSELEMENTE UND IHR GEBRAUCH
- Hauptschalter I/O 18
- Signallichte 18
- Nah- und Fernregelung des Schweißstromes 18
- Funktion des Ventilators 18

ZUSATZAUSRÜSTUNGEN
- FUNKTION DER STEUERPANELE PL UND PX FÜR STABELEKTRODENSCHWEISSEN
- Einstellung für Stabelektroden-Dynamik (PL, PX) 18
- Einstellung für Stabelektrodenschweiß-Startstrom (PX) 18
- Anzeige der Messer (PL, PX) 19
- Wahl für Betätigungsweise (PX)
  - Normales Stabelektrodenschweißen 19
  - Steppnahtschweißen 19
  - Kohlelichtbogenmeißeln 19

VERSORGUNG FÜR ABKÜHLGERÄT 19
BETRIEBSSICHERHEIT 19
WARTUNG
- Kabel 20
- Stromquelle 20
- Termingebundene Wartung 20

BETRIEBSSTÖRUNGEN
- Funktion der Überlastungsschutze 20
- Steuersicherungen 20
- Über- und Unterspannungen des Netzes 20
- Fehlen einer Netzphase 20

GARANTIEBEDINGUNGEN 21

NEDERLANDS

BEDIENING EN AANSLUITINGEN 4
ACCESSOIRES
Afstandsbedieningen 5
Stuurpaneel 6
Kabels 8
TECHNISHE GEGEVENS 22
INSTALLEREN
Plaatsen van de machine 23
Montage van controlepanelen PL en PX 23
Netaansluiting 23
Las- en werkstukkabels 23

BEDIENING VAN SCHAKELAARS EN POTENTIO- METERS EN HUN FUNCTIES
Hoofschakelaar I/O 24
Signaallamp 24
Paneel/afstandsbediening van de lasstroom 24
Werking van de ventilator 24
ACCESSOIRES
INSTELLING VAN CONTROLPANELEN PL EN PX BIJ MMA LASSEN
Regeling voor elektrodenlassen-dynamiek (PL, PX) 24
Instelling startstroom (PX) 24
Meter display (PL, PX) 24
Selectie werkmethode (PX) 25
Normaal MMA lassen 25
Onderbroken lassen 25
Gutsen met koolstofelektroden 25

AANSLUITING KOELUNIT 25
VEILIGE WERKING....25
ONDERHOUD
Kabels 26
Stroombron 26
Periodiek onderhoud 26
STORINGEN
Overbelastings-beveiliging 26
Stuurstroomzekeringen 26
Stroomdalen en pieken 26
Ultvaellen van een phase 26
GARANTIE VOORWAARDEN 26

FRANÇAIS

COMMANDES ET CONNECTEURS 4
ACCESSOIRES
Commandes à distance 5
Panneaux de commande 6
Câbles 8
CARACTERISTIQUES TECNIQUES 28
INSTALLATION
Mise en place 29
Montage des panneaux de commande PL et PX 29
Connection primaire 29
Câbles de soudage et de masse 29

UTILISATION DES DIFFERENTS COMMUTATEURS ET POTENTIOMETRES
Commutateur principal I/O 30
Témoins lumineux 30
Réglage du courant de soudage. Local/ou commande à distance 30
ACCESSOIRES
OPERATION DES PANNEAUX DE COMMANDE PL ET PX POUR LE SOUDAGE ELECTRODES ENRO- BEES
Réglage de la dynamique du soudage d'électro- des enrobées (PL, PX) 30
Réglage du courant amorçage du soudage d'électrodes enrobées (PX) 30
La lecture des unités de mesure (PL, PX) 30
Sélection de mode de fonctionnement (PX)
Soudage normal avec des électrodes enro- bées 31
Soudage en ligne continue par points 31
Gougeage à l'arc (électrodes carbone) 31

ALIMENTATION D'UNITE DE REFROIDISSEMENT 31
RAPPEL DE SECURITE 31
MAINTENANCE
Câbles 32
Source de puissance 32
Entretien régulier 32
DEFAUTS DE FONCTIONNEMENT 32
Protection contre la surcharge 32
Fusibles de commande 32
Sous- et sur-tensions du secteur 32
Coupure d'une phase dans l'alimentation secteur 32
CONDITIONS DE GARANTIE 32

OPERATION CONTROL AND CONNECTORS
BEDIENUNGSELEMENTE UND ANSCHLÜSSE
BEDIENING EN AANSLUITINGEN
COMMANDES ET CONNECTEURS

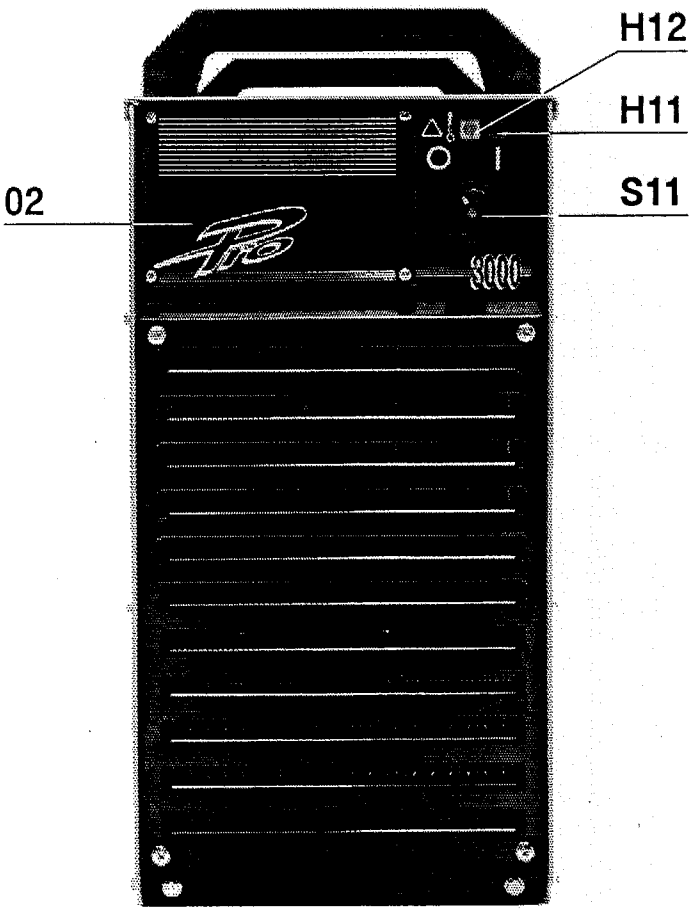

F11 Fuse for connection for control cable — 6,3 A slow-blow
Sicherung für Anschluß für Steuerkabel — 6,3 A träge
Zekering voor aansluiting voor stuurstroomkabel — 6,3 A traag
Fusible pour connecteur du câble de commande — 6,3 A temporisé

H11 Signal lamp I/O
Signallampe I/O
Signaallamp I/O
Voyant lumineux I/O

H12 Warning lamp for thermal shield
Warnungslampe für Wärmeschutz
Waarschuwingslicht voor termische overbelasting
Feu indicateur pour écran thermique

S11 Main switch I/O
Hauptschalter I/O
Hoofdschakelaar I/O
Interrupteur principal I/O

X11 Welding and earth connection + parallel
X12 Schweiß- und Rückleitungsanschluß + parallel
Aansluiting voor las- en werkstukkabel parallel
Connecteur courant de soudage et de masse parallèles

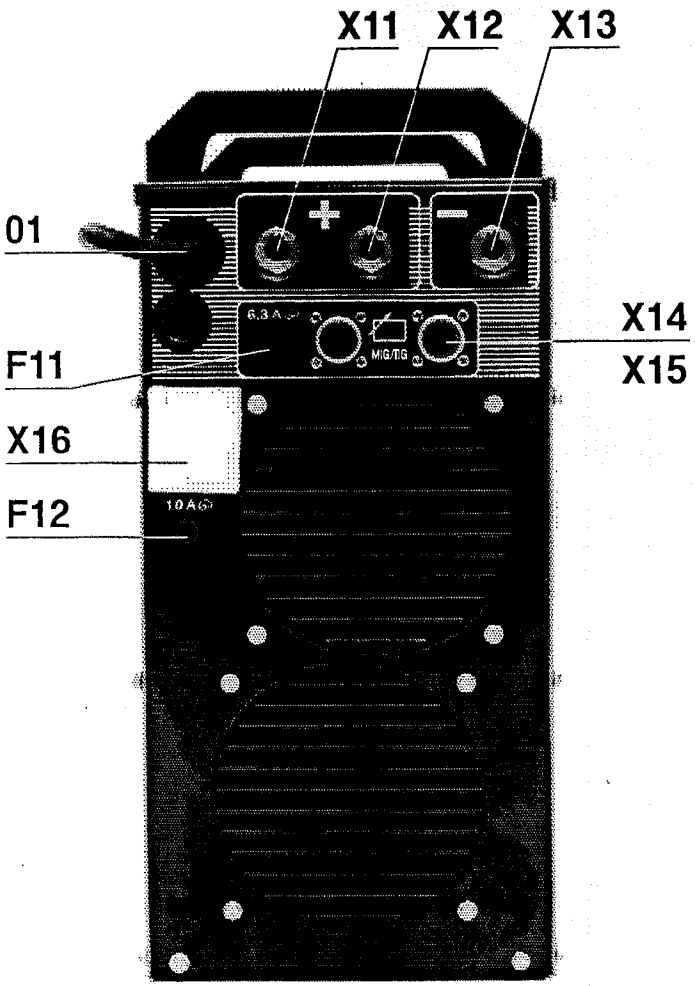

X13 Welding and earth connection —
Schweiß- und Rückleitungsanschluß
Aansluiting voor las- en werkstukkabel
Connecteur courant de soudage et de masse

X14 Connection for control cable parallel
X15 Anschluß für Steuerkabel parallel
Aansluiting voor stuurstroomkabel parallel
Connecteur du câble de commande parallèles

01 Inlet of mains cable
Durchführung des Netzkabels
Doorvoer voor aansluitkabel
Passe-câbles

02 Inspection cover for control panel **PL, PX** Accessories
Montageluke für Steuerpanel **PL, PX** Zusatzausr.
Montageluik voor stuurpaneel **PL, PX** Accessoires
Panneau de regard pour panneau de commande **PL, PX** Accessoires

X16 PRO 4000, PRO 5000

Socket outlet Schuko 230 V, 250 VA
Steckdose Schuko 230 V, 250 VA
Kontaktdozen Schuko 230 V, 250 VA
Prise Schuko 230 V, 250 VA

F12 Fuse for socket outlet 1,0 A slow-blow
Sicherung für Steckdosen 1,0 A träge
Zekering voor kontaktdozen 1,0 A traag
Fusible pour prises murales 1,0 A temporisé

REMOTE CONTROL DEVICES
FERNREGLER
AFSTANDSBEDIENINGEN
COMMANDES A DISTANCE

R10 6185409

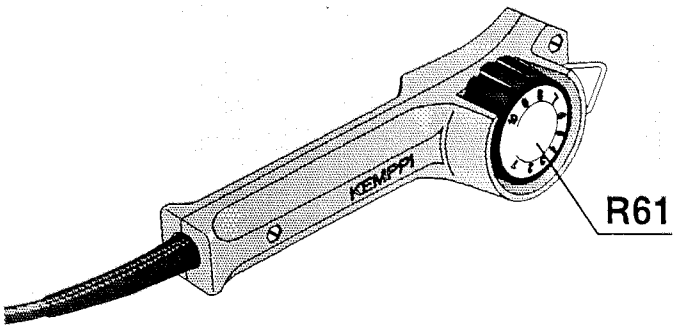

Control of MMA/TIG welding current (**R61**), reference scale 1...10.

Einstellung für Stabelektroden-/WIG-Schweißstrom (**R61**), Referenzskale 1...10.

Lasstroomregeling elektroden-/TIG-lassen (**R61**), schaal 1...10.

Réglage du courant de soudage Electrode/TIG (**R61**), échelle de mémoire 1...10.

R20 6185419

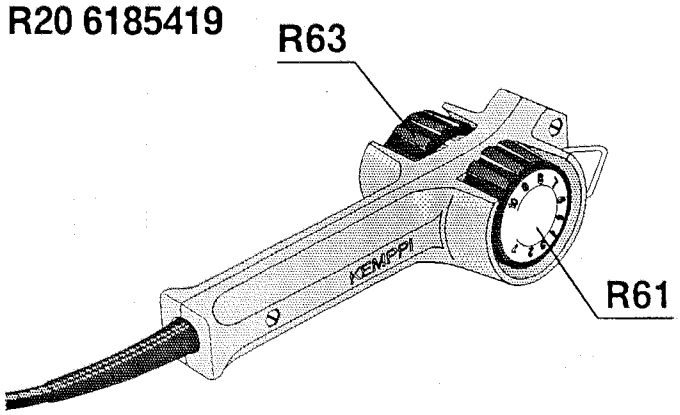

MIG-MAG remote control device with controls for wire feed (**R63**) and voltage (**R61**), memory scales 1...10.
You can use control device also for control of MMA current from potentiometer **R63**.

MIG-MAG-Fernregler mit Einstellungen für Drahtvorschub (**R63**) und Spannung (**R61**), Speicherskale 1...10.
Sie können den Regler auch zur Einstellung für Stabelektrodenstrom vom Potentiometer **R63** verwenden.

MIG-MAG afstandsbediening met regeling voor draadaanvoer (**R63**) en voltage (**R61**), schaal 1...10.
De afstandsbediening is ook te gebruiken bij MMA-lassen voor met instellen van de lasstroom van potentiometer **R63**.

Commande à distance pour procédés MIG-MAG avec réglage de dévidoir (**R63**) et de la tension (**R61**), échelle de mémoire 1...10.
Vous pouvez utiliser la commande aussi pour le réglage de courant MMA d'un potentiomètre **R63**.

CONTROL PANELS
STEUERPANEL
STUURPANEEL
PANNNEAUX DE COMMANDE

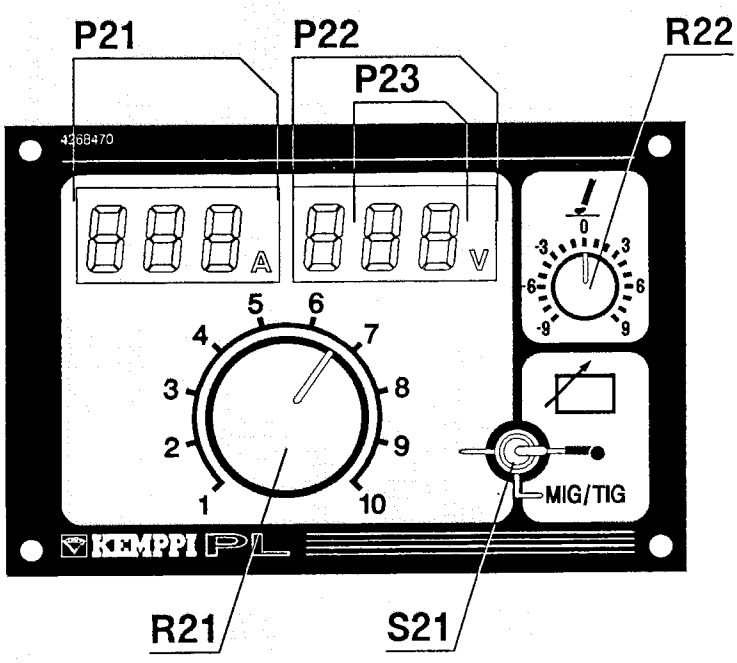

PL PANEL,
PL-PANEL, PL-PANEEL, PANNEAU PL
6185801

P21 Current meter — set value / welding current
Strommesser — Sollwert / Schweißstrom
Amperemeter — instelwaarde / lasstroom
Ammètre — valeur de consigne / courant de soudage

P22 Voltage meter — open circuit- / terminal voltage
Spannungsmesser — Leerlauf- / Polspannung
Voltmeter — nullast- / klemspanning
Voltmètre — tension à vide / aux bornes

P23 Display for adjustment value of MMA welding dynamics –9...0...+9
Anzeige des Einstellungwertes für Stabelektroden-schweiß-Dynamik –9...0...+9
Aanwijzing instelwaarde voor dynamiek bij elektroden-lassen –9...0...+9
Visualisation de valeur de réglage, dynamique du soudage électrode –9...0...+9

R21 Adjustment of welding current
Einstellung für Schweißstrom
Regeling van de lasstroom
Réglage du courant de soudage

R22 Adjustment of MMA welding dynamics
Einstellung für Stabelektrodenschweiß-Dynamik
Regeling dynamiek bij elektrodenlassen
Réglage pour dynamique du soudage électrode

S21 Selection for local/remote control
local / MIG/TIG / remote control
Wahl für Nah-/Fernregelug
Nah / MIG/TIG / Fernregel
Keuze voor paneel-/afstandsbediening
paneel / MIG/TIG / afstandsbediening
Sélection commande locale/à distance
locale / MIG/TIG / commande à distance

PX PANEL,
PX-PANEL, PX-PANEEL, PANNEAU PX
6185802

H31 Signal lamp for voltage display
Signallampe für Spannungsanzeige
Signaallamp voor spanningsaanwijzing
Voyant lumineux pour visualisation de tension

H32 Signal lamp for display of adjustment status
Signallampe für Anzeige des Einstellzustandes
Signaallamp voor aanwijzing instelling
Voyant lumineux pour visualisation d'état de réglage

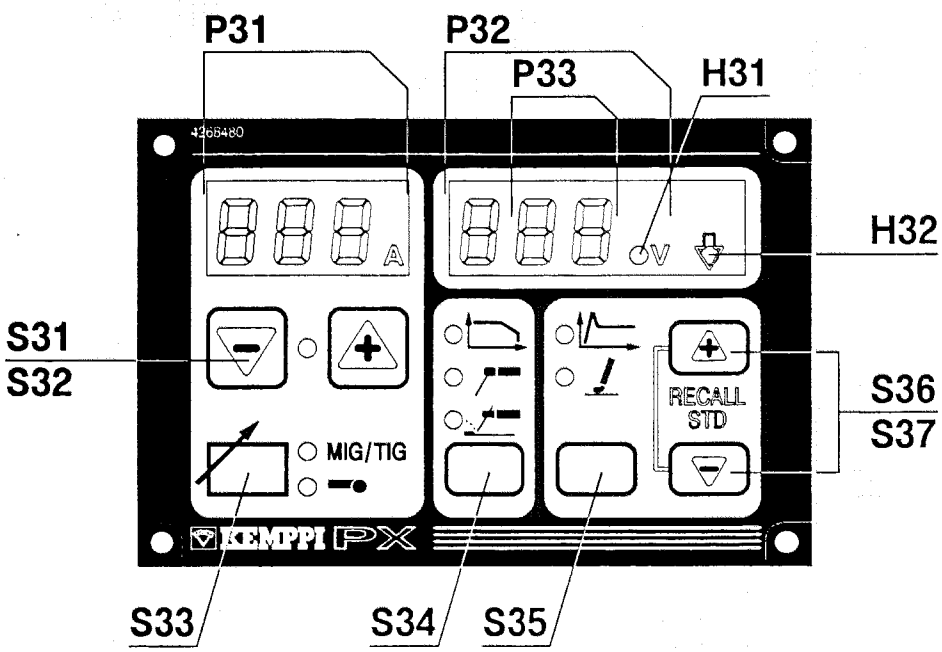

P31 Current meter / Strommesser / Amperemeter / Ammètre — set value / welding current / Sollwert / Schweißstrom / instelwaarde / lasstroom / valeur de consigne / courant de soudage

P32 Voltage meter / Spannungsmesser / Voltmeter / Voltmètre — open circuit- / terminal voltage / Leerlauf- / Polspannung / nullast- / klemspanning / tension à vide / aux bornes

P33 Display for adjustment value of MMA welding dynamics and start current –9...0...+9
Anzeige des Einstellungwertes für Stabelektroden-schweiß-Dynamik und Startstrom –9...0...+9
Aanwijzing voor instelwaarde voor dynamiek bij elektro-denlassen en startstroom –9...0...+9
Visualisation de valeur de réglage, dynamique du soudage électrode et du courant d'amorçage –9...0...+9

S31 Adjustment of welding current +/–
S32 Einstellung für Schweißstrom +/–
Regeling van de lasstroom +/–
Réglage du courant de soudage +/–

S33 Selection for local/remote control
local / MIG/TIG / remote control
Wahl für Nah-/Fernregelug
Nah / MIG/TIG / Fernregel
Keuze voor paneel-/afstandsbediening
paneel / MIG/TIG / afstandsbediening
Sélection commande locale/à distance
locale / MIG/TIG / commande à distance

S34 Selection for characteristics
point to point weldingg / normal welding / carbon arc gougin
Wahl für Charakteristika
Steppnahtschweißen /Normalschweißen / Kohle-lichtbogenmeißeln
Keuze van karakteristiek
point to point lassen / normaal lassen / gutsen mot koolstofelektroden
Sélection pour caractéristiques
soudage point par point / soudage normal / coupage à l'arc avec électrode de carbone

S35 Selection of property to be adjusted
MMA welding dynamics / start current
Wahl für einstellbare Eigenschaft
Stabelektrodenschweiß-Dynamik / Startstrom
Keuze voor instelbare eigenschap
elektrodenlassen-dynamiek / startstroom
Sélection de propriétés réglables
dynamique du soudage électrode / du courant d'amorçage

S36 Adjustment for MMA welding dynamics and start
S37 current +/–
Einstellung für Stabelektrodenschweiß-Dynamik und Startstrom +/–
Instelling voor elektrodenlassen-dynamiek en start-stroom +/–
Réglage, dynamique du soudage électrode et du cou-rant d'amorçage +/–

RECALL STD = resetting of factroy set up (=0)
RECALL STD = Wiederherstellung der Fabrikeinstellung (=0)
RECALL STD = terruggave fabrieksafstelling (= 0)
RECALL STD = retour de réglage d'usine (= 0)

CABLES
KABEL
KABELS
CABLES

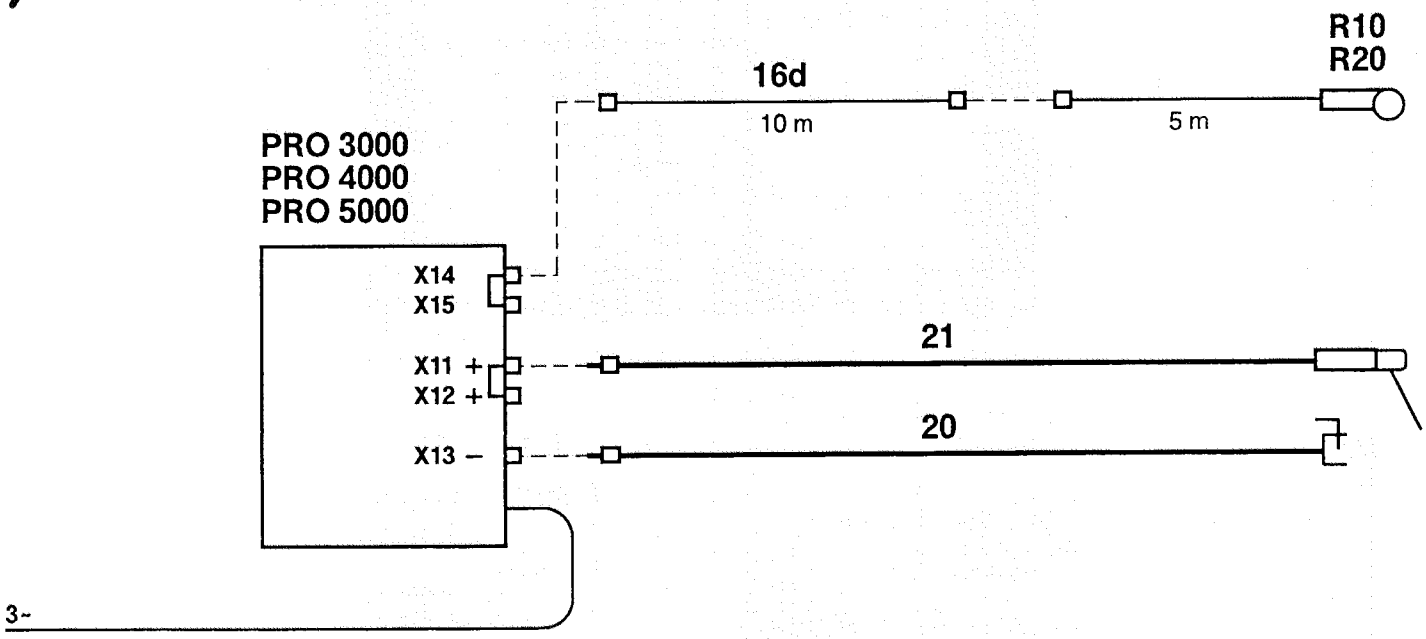

16d Extension cable for remote control
Verlängerungskabel für Fernregelung
Verlengkabel voor afstandbediening
Câble prolongateur pour commande à distance

20 Earth cable
Stromrückleitungskabel
Werkstukkabel
Câble de masse

21 MMA welding Cable
Kabel für Stabelektrodenschweißen
Kabel voor elektrodenlassen
Câble soudage électrode

R10
R20 Remote control devices, see also pages 5 and 12
Fernregler, auch Seiten 5 und 18 sehen
Afstandbedieningen, zie ook pag. 5 en 24
Commandes à distance, voir également pages 5 et 30

PRO 3000	**6131300**
PRO 4000	**6131400**
PRO 5000	**6131500**
20/5 m – 50 mm²	**6184511**
20/5 m – 70 mm²	**6184711**
21/5 m – 50 mm²	**6184501**
21/5 m – 70 mm²	**6184701**
PL	**6185801**
PX	**6185802**
R10	**6185409**
R20	**6185419**
16d /10 m	**6185481**
T10	**6185231**
T 120	**6185252**

ENGLISH

PRO 3000, 4000 and 5000 are multi-operator power sources designed for demanding professional use. They are suitable for MMA/MIG and pulsed MIG as well as for TIG welding at d.c. PRO can be used as power source with welding automate or robot.

Power control of PRO power source has been realized with at ca. 20 kHz frequency IGBT transistors operating and control unit with microprocessor.

KEMPPI PRO units can be seen in table.
Device assemblies being suitable for various welding methods as well as operating instruction has been described in manual for each unit. Mounting instructions for control panels PX and PL are in their packages.
This manual handles installation and use of PRO power sources.

Product	Name	Operation / Mounting instructions
MIG wire feed units	PROMIG 500 PROMIG 510	1923490 1923490
MIG sub-feeder	PROMIG 100	1923460
TIG ignition unit	PROTIG 400	1927340
Cooling unit	PROCOOL 10	1926280
MIG guns	PMT series air-cooled liquid-cooled	 1925570 1925600
TIG torches	PTT series,	1927380
Transport carriage	P20	4270450
Transport carriage	P30W	4270460

TECHNICAL DATA

		PRO 3000	PRO 4000	PRO 5000
Mains voltage	3~, 50/60 Hz	380 V -10 % ... 415 V +6 %	380 V -10 % ... 415 V +6 %	380 V -10 % ... 415 V +6 %
Rated power	60 % ED 100 % ED	300 A / 13,0 kVA 250 A / 9,9 kVA	400 A / 19,7 kVA 310 A / 14,6 kVA	500 A / 28,2 kVA 390 A / 20,2 kVA
Connection cable / fuses		4 x 2,5S - 5 m / 20 A slow-blow	4 x 6S - 5 m / 25 A slow-blow	4 x 6S - 5 m / 35 A slow-blow
Loading capacity (nominal values)	60 % ED 100 % ED	300 A / 32,0 V 250 A / 30,0 V	400 A / 36,0 V 310 A / 32,4 V	500 A / 40,0 V 390 A / 35,6 V
Control range for welding current and voltage (stepless)	MMA TIG MIG	10 A...300 A 5 A...300 A 10 V...35 V	10 A...400 A 5 A...400 A 10 V...39 V	10 A...500 A 5 A...500 A 10 V...45 V
Max. welding voltage		43 V / 300 A	46 V / 400 A	50 V / 500 A
Open circuit voltage		ca. 65 V	ca. 65 V	ca. 65 V
Open circuit power		< 75 W	< 75 W	< 75 W
Operation frequency		ca. 20 kHz	ca. 20 kHz	ca. 20 kHz
Efficiency at nominal values		ca. 85 %	ca. 85 %	ca. 85 %
Power factor at nominal values		ca. 0,90	ca. 0,90	ca. 0,90
Storage temperature range		- 40 ...+ 60 °C	- 40 ...+ 60 °C	- 40 ...+ 60 °C
Operation temperature range		- 20 ...+ 40 °C	- 20 ...+ 40 °C	- 20 ...+ 40 °C
Temperature class		H (180 °C) / B (130 °C)	H (180 °C) / B (130 °C)	H (180 °C) / B (130 °C)
Degree of protection		IP 23	IP 23	IP 23
External dimensions without handles	length width height	530 mm 230 mm 520 mm	530 mm 230 mm 520 mm	530 mm 230 mm 520 mm
Weight		37 kg	41 kg	48 kg
Voltage supply for auxiliary devices X14, X15		50 V DC fuse 6,3 A slow-blow	50 V DC fuse 6,3 A slow-blow	50 V DC fuse 6,3 A slow-blow
Voltage supply for cooling unit X16 (PROCOOL)		1~, 230 V / 250 VA fuse 1,0 A slow-blow [1]	1~, 230 V / 250 VA fuse 1,0 A slow-blow	1~, 230 V / 250 VA fuse 1,0 A slow-blow

The product meets conformity requirements for CE marking.

[1] Only as accessory **6185631**

INSTALLATION

= Instruction = Warning = Prohibition

Siting the machine

SITE THE MACHINE ON A STATIONARY, HORIZONTAL, DRY BASE FROM WHICH THERE DOESN'T COME ANY DUST ETC. INTO COOLING AIR (FRONT GRATE).

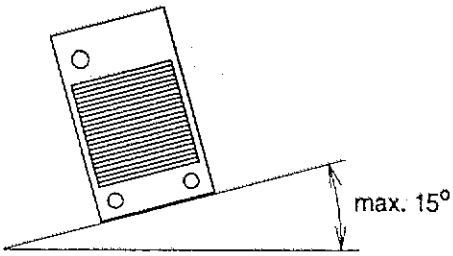

- Preferably site the machine somewhat higher above the floor level.
- See to that in front of the machine as well as at the rear of the machine there is at least 20 cm free distance to allow good circulation of the cooling air through the machine.
- PROTECT THE MACHINE AGAINST HEAVY RAIN AND IN HOT CIRCUMSTANCES AGAINST DIRECT SUNSHINE. Ensure the free circulation of the cooling air.

DEGREE OF PROTECTION OF MACHINE **IP23** ALLOWS AT ITS MAXIMUM THE WATER JET COMING IN 60° ANGLE TO HIT MACHINE'S OUTER COVERING.

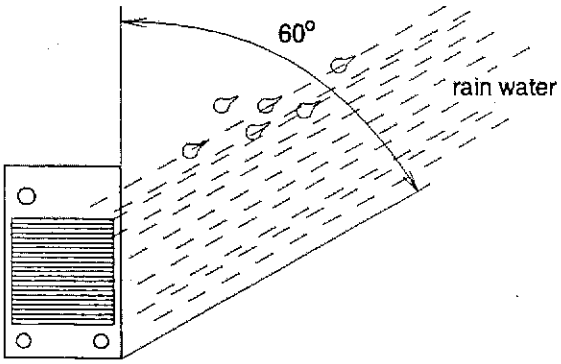

SEE TO THAT THE MACHINE IS POSITIONED AWAY FROM THE LINE OF PARTICLE SPRAY, CREATED BY GRINDING TOOLS ETC.

Mounting the control panels PL and PX

MOUNTING OF PANEL SHOULD ONLY BE CARRIED OUT BY A COMPETENT ELECTRICIAN.
ATTENTION! DISCONNET PLUG OF MACHINE FROM MAINS SOCKET AND WAIT FOR CA. 2 MIN BEFORE REMOVING COVER PLATE.

- On the front wall of machine there is a cover plate at which place the control panel is mounted. Without panel the machine is controlled either from remote control unit or PROMIG or PROTIG unit.
- Mount PL or PX panel according to mounting instructions delivered with them.

Connection to the mains supply

PRO power sources are delivered equipped with 5 m mains cable without plug.

If local electricity regulations of operating country are stating otherwise, the mains cable should be replaced in conformity of them.

CONNECTION OF THE MAINS CABLE AND MOUNTING AND CHANGE OF THE PLUG SHOULD ONLY BE CARRIED OUT BY A COMPETENT ELECTRICIAN.

REMOVE MACHINE'S RIGHT SIDE PLATE FOR THE TIME YOU ARE MOUNTING MAINS CABLE.

By change of the mains cable take into attention the following: The cable is entered into the machine through the inlet ring on the rear panel of the machine and fastened with a cable clamp (05). The phase conductors of the cable are coupled to connectors L1, L2 and L3.The earth protection coloured green-yellow is coupled to connector ⏚.

If you are using 5-lead cable, you must connect **neutral conductor** with terminal **N**.

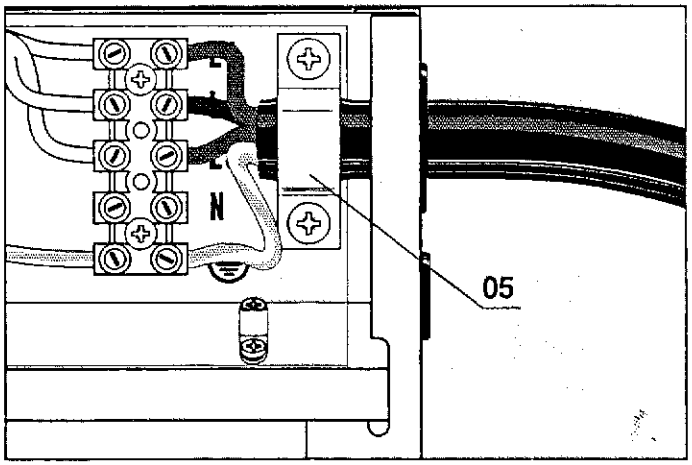

Sizes of the mains cables and fuse ratings for the machine at 100 % duty cycle are specified in the table below:

	PRO 3000	PRO 4000	PRO 5000
Rated voltage Mains voltage range	400 V 3~ 380 V -10 % ... 415 V +6 %		
Fuses, slow-blow	20 A	25 A	35 A
Connection cable *) mm^2	4 x 2,5 S	4 x 6,0 S	4 x 6,0 S

*) In cables of S type there is a protective grounding conductor coloured green-yellow.

Welding and earth cables

Use only copper cables with cross-sectional area of at least:

PRO 3000 50 mm^2
PRO 4000 70 mm^2
PRO 5000 70...95 mm^2

In enclosed table are shown typical load capacities of rubber insulated copper cables, when ambient temperature is 25 °C and lead temperature is 85 °C.

CABLE	DUTY CYCLE ED			VOLTAGE-LOSS / 10 m
	100 %	60 %	30 %	
50 mm^2	285 A	370 A	520 A	0,35 V / 100 A
70 mm^2	355 A	460 A	650 A	0,25 V / 100 A
95 mm^2	430 A	560 A	790 A	0,18 V / 100 A

DON'T OVERLOAD WELDING CABLES DUE TO VOLTAGE LOSSES AND HEATING.

Fasten the earthing press of the return current cable carefully, preferably direct onto the piece to be welded. The contact surface of the press should always be as large as possible.

CLEAN THE FASTENING SURFACE FROM PAINT AND RUST!

OPERATION CONTROL SWITCHES AND POTENTIOMETERS AND THEIR USE

Main switch I/O

When you turn the switch into **I**-position, pilot lamp **H11** on the front wall is lighted and the machine is ready for use.

ALWAYS START AND SWITCH OFF THE MACHINE WITH THE MAIN SWITCH, NEVER USE THE MAINS PLUG AS A SWITCH.

Pilot lamps

The pilot lamps of the machine report about the electric operation:

The green pilot lamp H11 for readiness for use is always lighted, when the machine is connected to mains supply and the main switch is in **I**-position.

Yellow pilot lamp H12 of thermal protection is lighted when thermostat has released due to overheating of machine. The cooling fan is cooling down the machine and when the pilot lamp is switched off, the machine is again ready for welding.

Local or remote control of welding current

You can control welding current either from LOCAL CONTROLS OF PX OR PL CONTROL PANEL, or from REMOTE CONTROL UNIT which is connected to remote control connector **X14** or **X15**, or from PROMIG or PROTIG unit.
Selector switch of control panel has to be in a position corresponding to control mode: LOCAL CONTROL / MIG/TIG / REMOTE CONTROL UNIT.
Suitable **remote control units R10** and **R20**, see page 5.

At MIG and TIG welding, current control is made according to operation instruction of controlling MIG or TIG unit.

Operation of cooling fan

In PRO 3000 there are one and in PRO 4000 and 5000 two simultaneously operating fans.
- Fan is started for a moment, when main switch is placed into position **I**.
- Fan is started after welding start after machine has been heated and runs still for 1...10 min time after welding stop.
- On no-load fan is started in intervals of ca. half an hour for minute's time.

ACCESSORIES

PL AND PX CONTROL PANELS' OPERATION IN MMA WELDING

Control for MMA welding dynamics (PL, PX)

With control for electrode dynamics you can influence arc behaviour in different kinds of operation situations.
When arc is roughened, blowing is increasing and at the same time also spatter.

- 9 Soft arc. Object to reduce amount of spatter in welding at the upper end of recommended currents for electrode.
- 0 Factory setup (PX). Normal setting for all electrode types.
- 9 Rough arc. Object e.g. cellulose covered electrodes and thin stainless electrodes in welding at the lower end of recommended currents for electrode.

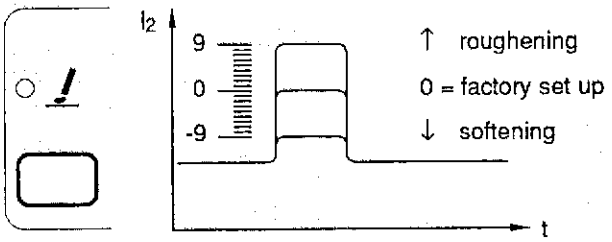

Control of ignition pulse current (PX)

Display 0 corresponds to factory set up of ignition pulse. Number of ignition pulses depends on electrode type and diameter which are used. Ignition pulse changes with set value of welding current in such a way that at low values ignition pulse is low and short and at high values high and long.

- 9 Low, short ignition pulse. Object e.g. small stainless electrodes.
- 0 Factory set up. Object e.g. basic electrodes.
- 9 High, long ignition pulse. Object e.g. high efficiency electrodes.

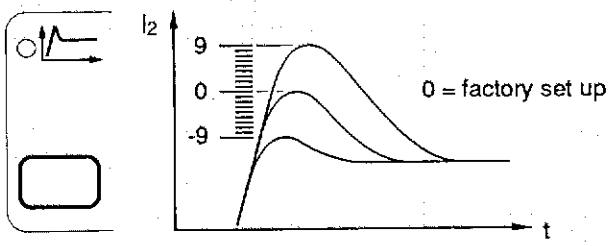

Meter display (PL, PX)

Voltage meter shows machine's terminal voltage which is voltage between connectors X11/X12 and X13.
Accuracy of digital meter is as follows:

Accuracy of current true value in respect to real value is ±2,5 %, ±2 A.
Accuracy of voltage true value in respect to real value is ±2,5 %, ±0,2 V.

Depending on welding cable length and copper cross-section, real arc voltage and meter display might differ many volts from each other. Error will increase when cur-

rent is growing. See table in paragraph "Welding and earthing cables", page 11.
In current measurement the same error won't appear.

Operation mode selection (PX)

Normal MMA welding

In normal MMA welding there are constant current characteristics in the machine. The machine is trying to keep welding current value regardless of arc length changes.

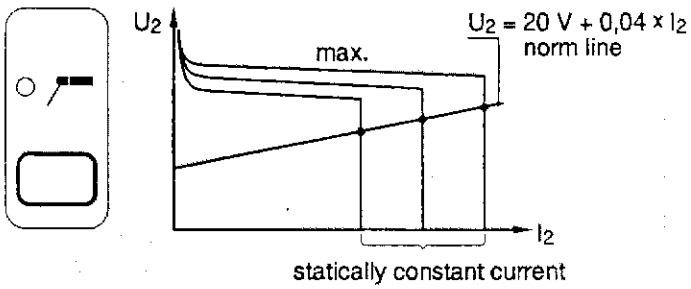

Point to point welding

Point to point welding is necessary then when the seam to be welded doesn't withstand heat of continuous arc and welding has to be carried out by interrupting arc. The reason is usually thin materials or variable fittings.
The machine has a characteristic curve which makes interrupting of arc easier when electrode is drawn further from seam.

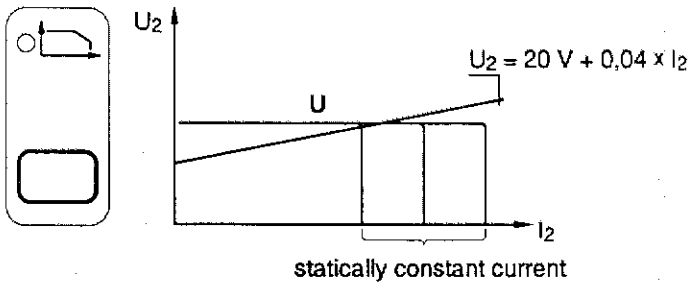

U is limited below max. voltage of machine

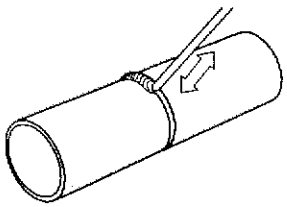

Carbon arc gouging

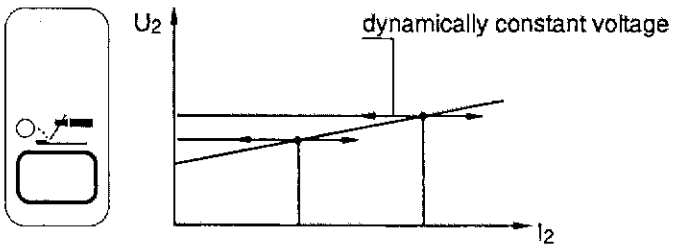

In carbon arc gouging there are dynamic constant voltage curves. If tip of gouging carbon makes short circuit, power source is trying to increase current strongly, short circuit ends rapidly and arc will reignite in an easier way.

COOLING UNIT SUPPLY 1~ 230 V/250 VA

PRO 4000 and 5000 power sources have as standard a by protective earthed outlet **X16** isolated safety transformer. PRO-COOL cooling unit is connected to this outlet. You can get it as accessory for PRO 3000 power source.

MOUNTING OF UNIT SHOULD ONLY BE CARRIED OUT BY AN AUTHORISED ELECTRICIAN.

⚠ OPERATION SAFETY

NEVER WATCH THE ARC WITHOUT A FACE SHIELD DESIGNED FOR ARC WELDING!

THE ARC DAMAGES UNPROTECTED EYES!
THE ARC BURNS UNPROTECTED SKIN!

BE CAREFUL FOR REFLECTING RADIATION OF ARC!

PROTECT YOURSELF AND THE SURROUNDINGS AGAINST THE ARC AND HOT SPRAY!

DON'T USE POWER SOURCE FOR MELTING OF FROZEN PIPES!

REMEMBER GENERAL FIRE SAFETY!

PAY ATTENTION TO THE FIRE SAFETY REGULATIONS. WELDING IS ALWAYS CLASSIFIED AS A FIRE RISK OPERATION.
WELDING WHERE THERE IS FLAMMABLE OR EXPLOSIVE MATERIAL IS STRICTLY FORBIDDEN.
IF IT IS ESSENTIAL TO WELD IN SUCH AN AREA REMOVE INFLAMMABLE MATERIAL FROM THE IMMEDIATE VICINITY OF THE WELDING SITE.
FIRE EXTINGUISHERS MUST ALWAYS BE ON SITE WHERE WELDING IS TAKING PLACE.

NOTE! SPARKS MAY CAUSE FIRE MANY HOURS AFTER COMPLETION OF WELDING.

WATCH OUT FOR THE MAINS VOLTAGE!

TAKE CARE OF THE CABLES - THE CONNECTION CABLE MUST NOT BE COMPRESSED, TOUCH SHARP EDGES OR HOT WORK PIECES.
FAULTY CABLES ARE ALWAYS A FIRE RISK AND HIGHLY DANGEROUS.
DO NOT LOCATE THE WELDING MACHINE ON WET SURFACES.
DO NOT TAKE THE WELDING MACHINE INSIDE THE WORK PIECE (I.E. IN CONTAINERS, CARS ETC.)

ENSURE THAT NEITHER YOU NOR GAS BOTTLES OR ELECTRICAL EQUIPMENT ARE IN CONTACT WITH LIVE WIRES OR CONNECTIONS!

DO NOT USE FAULTY WELDING CABLES.
ISOLATE YOURSELF BY USING DRY AND NOT WORN OUT PROTECTIVE CLOTHES.
DO NOT WELD ON WET GROUND.
DO NOT PLACE THE WELDING CABLES ON THE POWER SOURCE OR OTHER ELECTRICAL EQUIPMENT.

WATCH OUT FOR THE WELDING FUMES!

ENSURE THAT THERE IS SUFFICIENT VENTILATION.
FOLLOW SPECIAL SAFETY PRECAUTIONS WHEN YOU WELD METALS WHICH CONTAIN LEAD, CADMIUM, ZINC, MERCURY OR BERYLLIUM.

NOTE THE DANGER CAUSED BY SPECIAL WELDING JOBS!

WATCH OUT FOR THE FIRE AND EXPLOSION DANGER WHEN WELDING CONTAINER TYPE WORK PIECES.

MAINTENANCE

The amount of use and the working environment should be taken into consideration when planning the frequency of maintenance of the machine. Careful use and preventive maintenance will help to ensure trouble-free operation.

Cables

Check the condition of welding and connection cables daily.
DO NOT USE FAULTY CABLES!
Make sure that the mains connection cables in use are safe and according to laid down regulations.

THE REPAIR AND MOUNTING OF MAINS CONNECTION CABLES SHOULD BE CARRIED OUT ONLY BY AN AUTHO-RISED ELECTRICIAN.

Power source

NOTE! DISCONNECT THE PLUG OF THE MACHINE FROM THE MAINS SOCKET AND WAIT APPROX. 2 MINUTES (CAPACITOR CHARGE) BEFORE REMOVING THE COVER PLATE

Check at least every half year:
- Electric connections of the machine - clean the oxidized parts and tighten the loosened ones
  NOTE! YOU MUST KNOW CORRECT TENSION TORQUES BEFORE STARTING THE REPARATION OF THE JOINTS.
- Clean the inner parts of the machine from dust and dirt e.g. with a soft brush and vacuum cleaner. Also clean the ventilation net behind the front grate.
  DO NOT USE COMPRESSED AIR, THERE IS A RISK THAT DIRT IS PACKED EVEN MORE TIGHTLY INTO GAPS OF COOLING PROFILES!
  DO NOT USE PRESSURE WASHING DEVICE!

ONLY AUTHORISED ELECTRICIAN SHALL CARRY OUT REPAIRS TO THE MACHINES.

Regular maintenance

KEMPPI-SERVICE REPAIR SHOPS MAKE REGULAR MAINTENANCE ACCORDING TO AGREEMENT.

The major points in the maintenance procedure are listed as follows:
- Cleaning of the machine
- Checking and maintenance of the welding tools
- Checking of connectors, switches and potentiometers
- Checking of electric connections
- Meter checking
- Checking of mains cable and plug
- Damaged parts or parts in bad connection are replaced by new ones
- Maintenance testing. Operation and performance values of the machine are checked, and adjusted when necessary by means of test equipment

OPERATION DISTURBANCES

IN CASE OF PROBLEMS CONTACT THE KEMPPI WORKS IN LAHTI, FINLAND OR YOUR KEMPPI-DEALER.

Check the maintenance objects before the machine is sent to the service repair shop.

Operation of the overload protection

Yellow pilot lamp H12 of thermal protection is lighted when thermostat has operated due to overheating of machine.

The thermostat of machine will operate, if machine is continuously loaded over rated values or cooling air circulation is blocked.

COOLING FAN COOLS DOWN THE MACHINE AND WHEN THE PILOT LAMP IS NOT LIGHTED THE MACHINE IS AUTOMATICALLY READY FOR WELDING.

Control fuses

Fuse **F11**, 6,3 A slow-blow, on the rear wall of machine is as protection for connection of auxiliary devices **X14-15**.
Voltage unit for auxiliary devices (1~ 230 V/240 VA) has a fuse of its own **F12** 1,0 A slow-blow.

USE SAME TYPE AND RATING OF FUSE WHICH IS MARKED BESIDE THE FUSE ADAPTER.
DAMAGE CAUSED BY A WRONG TYPE FUSE IS NOT COVERED BY THE GUARANTEE.

Under- and overvoltages in the mains supply

Primary circuits of machine are protected against sudden, transient overvoltages.
Machine is designed to withstand 3 x 440 V voltage continuously (see TECHNICAL DATA: 415 V +6 %). See to it that voltage is kept within admissible limits especially when mains supply is taken e.g. from combustion engine generator.
If the mains has undervoltage (under ca. 300 V), machine control stops to operate automatically.

Loss of a phase in the mains supply

Loss of a phase causes noticeable poorer welding properties than normally or the machine doesn't get started at all. Loss of a phase can be due to following:
- blowing of mains supply fuse
- defective mains cable
- bad connection of mains connection cable on terminal block or plug of machine.

TERMS OF GUARANTEE

KEMPPI OY provides a guarantee for products manufactured and sold by them if defects in manufacture and materials occur. Guarantee repairs must be carried out only by an Authorized KEMPPI Service Agent. Packing, freight and insurance costs to be paid by third party. The guarantee is effected on the day of purchase. Verbal promises which do not comply with the terms of guarantee are not binding on guarantor.

Limitations on guarantee

The following conditions are not covered under terms of guarantee: defects due to fair wear and tear, non-compliance with oper-

ating and maintenance instructions, connection to incorrect or faulty supply voltage (including voltage surges outside equipment spec.), incorrect gas pressure, overloading, transport or storage damage, fire or damage due to natural causes i.e. ligthning or flooding.
This guarantee does not cover direct or indirect travelling costs, daily allowances or accomodation.
Note: Under the terms of the guarantee, Welding torches and their consumables, feed, drive rollers and feeder guide tubes are not covered.
Direct or indirect damage due to a defective product is not covered under the guarantee.
The guarantee is void if changes are made to the product without approval of the manufacturer, or if repairs are carried out using non-approved spare parts.
The guarantee is also void if repairs are carried out by non-authorised agents.

Guarantee period

The guarantee is valid for one year from date of purchase, provided that the machine is used for single-shift operation.
The guarantee period for double and treble shift operation is six months and four months respectively.

Undertaking guarantee repairs

Guarantee defects must be informed to KEMPPI or authorised KEMPPI Service Agents within the guarantee period. Before any guarantee work is undertaken, the customer must provide proof of purchase and serial number of the equipment in order to validate the guarantee.
The parts replaced under the terms of guarantee remain the property of KEMPPI.
Following the guarantee repair, the guarantee of the machine or equipment, repaired or replaced, will be continued to the end of the original guarantee period.